Brecknell

January 2023

US PRODUCT GUIDE

CONTACT INFORMATION

Brecknell USA
1000 Armstrong Drive
Fairmont, Minnesota 56031
Toll-Free: 800-637-0529
Telephone: 507-238-8702
Fax: 507-238-8271
Email: sales@brecknellscales.com
www.brecknellscales.com

Brecknell Canada
6429 Abrams Street
St. Laurent, Quebec
Canada H4S 1X9
Toll Free: 800-268-1662
Telephone: 416-213-9900
Fax: 416-213-9960
Email: sales@brecknellscales.ca
www.brecknellscales.ca

VALUE IN WEIGHING

COMPANY HISTORY

Brecknell has grown over the last century to become a global leader in weighing solutions.

Charles W Brecknell and Co was founded in 1913 in Birmingham, England and was the first firm to manufacture visible weighers for the wholesale industry. The company continued to expand into the 1920s and was purchased by W & T Avery Limited in 1926.

The Salter brand has also played a part in Brecknell's history. Products were sold under the name Salter Brecknell for several years when Avery Scales and Weigh-Tronix merged to form Avery Weigh-Tronix in 2003.

Today, the Brecknell brand is part of Avery Weigh-Tronix, a world leading manufacturer of industrial scales, weighing equipment and measurement devices. With a long history dating back to the 1700s, Avery Weigh-Tronix is headquartered in Birmingham, England and has manufacturing facilities in the UK, USA, China and India.

Brecknell scales are designed and manufactured with focus on high-value, easy-to-use and accurate weighing solutions for the majority of industries worldwide, from industrial weighing equipment, to office and medical scales. Our global presence ensures the highest quality service and support to our customers.

Brecknell

APPLICATION CHART

	CANADIAN APPROVAL	NSF	NTEP APPROVED	BABY WEIGHING	COUNTING	EDUCATION/LABORATORY	FLOOR SCALE/PLATFORM	FOOD SERVICE	HANGING	INDICATOR	INDUSTRIAL/WAREHOUSE	INVENTORY/COUNTING	MEDICAL/HEALTH	OFFICE/SHIPPING	POINT OF SALE	PORTION CONTROL	PRICE COMPUTING	PRINTER	REMOTE DISPLAY	SPORTS/ANGLING	VETERINARY	PAGE(S)
311			●			●		●						●		●						14
6030								●								●						40
3900LP System			●				●	●			●	●		●								20
67XXU Series	●	●	●		●			●				●			●	●						44-45
B140		●			●			●			●	●				●						8
BCS Series									●		●											10
CP103																		●				46
CS Series									●		●											9
CS-200M													●									36
DCSB			●				●				●											23
DCSB w/SBI 240			●				●				●											24
DCSB w/SBI 521			●				●				●											25
DS1000-LCD											●	●		●								22
ElectroSamson				●					●		●		●							●	●	30
EPB					●	●		●														6
GP100/GP250-USB											●			●								16
HS-200M													●							●		33
HS-300													●							●		34
LPS15/LPS150/LPS400								●			●			●		●						18
MBS Series				●		●		●				●		●		●					●	7
Model 405-LCD		●						●						●		●						11
Model 430								●				●	●	●		●						12
Model C3235		●			●			●				●	●			●						41
Model C3236					●			●				●	●			●						42
MS1000-LCD													●									37
MS140-300													●							●		35
MS-15				●									●								●	31
MS-20 Series				●									●							●	●	32
PC3060			●					●								●	●					43
PS1000/PS2000							●				●			●							●	38
PS150/PS400 Slimline											●			●								17
PS25														●								15
PS3000-LCD							●				●										●	39
PS500							●					●		●						●	●	21
PS7						●								●								13
PS-USB	●		●	●	●		●				●	●		●	●							19
SBI 140										●	●	●		●		●					●	26
SBI 210										●	●	●									●	27
SBI 240	●		●							●	●	●		●		●					●	28
SBI 521			●							●	●	●									●	29

VALUE IN WEIGHING

PRODUCT INDEX

Balance
EPB 6
MBS Series 7

Counting/Coin Scales
B140 8

Crane Scales
CS Series 9
BCS Series 10

Electronic Bench Scales
Model 405-LCD 11
Model 430 12

Postal/Shipping
PS7 13
311 14
PS25 15
GP100 / GP250 USB 16
PS150 / PS400 Slimline 17
LPS15 / LPS150 / LPS400 18
PS-USB 19
3900LP Base + SBI 110 Indicator 20

Floor Scales
PS500 + SBI 140 Indicator 21
DS1000-LCD + SBI 210 Indicator 22
DCSB Floor Scale 23
DCSB Floor Scale + SBI 240 Indicator 24
DCSB Floor Scale + SBI 521 Indicator 25

Indicators
SBI 140 26
SBI 210 27
SBI 240 28
SBI 521 29

Hanging Scales
ElectroSamson 30

Medical Scales
MS-15 31
MS-20 / MS-20S 32
HS-200M 33
HS-300 34
MS140-300 + SBI 140 Indicator 35
CS-200M 36
MS1000-LCD 37

Veterinary
PS1000 / PS2000 + SBI 140 Indicator 38
PS3000-LCD + SBI 210 Indicator 39

Portion Control
6030 40

Check Weighing
Model C3235 41
Model C3236 42

Price Computing
PC3060 43

Point of Sale (PoS)
67XXU Series 44-45

Printers
CP103 46

Load Cells
Load Cells 47

EDUCATION
HOSPITALS

INDUSTRIAL
LABORATORIES

EPB Series

Features

- **Accuracy–** 0.04%
- **Capacity–** 500 g x 0.01 g, 3000 g x 0.1 g
- **Construction–** ABS case with stainless steel weighing platter and plastic protector cover
- **Power–** Two AAA batteries (included)
- **Display–** $^{9}/_{16}$″ / 14 mm high seven segment LCD with white backlight
- **Operator Keys–** On/Off, Function Mode, Tare, Count

Specifications

Unit: lb, oz, g, kg, tl, ct

Functions: Weight mode, tare, counting, calibration

Annunciators: Overload and low battery indicator

Auto-off: Shuts off after 60 seconds to help enhance battery life

Calibration: Three point

Tare: 100% push button

Part Number	Capacity	Ship Weight
816965007097	500 g x 0.01 g	0.055 lb
816965007103	3000 g x 0.1 g	0.055 lb

Operating Temperature: 50° F - 86° F / 10° C - 30° C

Scale Dimension (L x W x H):
5.5″ x 4" x 0.8" / 140 mm x 107 mm x 20 mm

Platter Dimension (L x W x H):
4" x 4" / 100 mm x 100 mm

Product Weight: 0.276 lb / 0.125 kg

Packaging Dimension (L x W x H):
6.2" x 5.1" x 1.2" (160 mm x 130 mm x 32 mm)

Certifications: CE, FCC compliance, Prop 65, RoHS 3, WEEE

EDUCATION
HOSPITALS

INDUSTRIAL
LABORATORIES

MBS Series

Features

- **Accuracy–** Within 0.004% of full load
- **Capacity–** 300 g x 0.005 g, 600 g x 0.01 g, 1200 g x 0.02 g, 3000 g x 0.05 g, 6000 g x 0.1 g
- **Construction–** Robust plastic housing, stainless steel top plate
- **Power–** 300-600 g units use six AA batteries (included) 1200-6000 g units use eight AA batteries (included)
- **Display –** Large, clear 6½ digits, 0.75″ / 19 mm high seven segment LCD with blue backlight
- **Operator Keys–** On/Off, Count, Cal, Tare, Mode, Unit

300 g and 600 g Shown with draft shield

1200 g, 3000 g and 6000 g

Specifications

Unit: lb, oz, g, ozt, dwt, ct, % pc

COMM Port: Bi-directional RS-232 (cable not included, p/n 52765-0949)

Battery Life: Approximately 15 hours

Operating Temperature: 50° F - 95° F / 10° C - 35° C

Scale Dimension (L x W x H):
300 g and 600 g capacities:
9.5" x 6.5" x 2.3" / 241 mm x 165 mm x 58 mm

1200 g to 6000 g capacities:
9.8" x 6.5" x 2.3" / 248 mm x 165 mm x 58 mm

Platter Dimension (L x W):
300 g and 600 g capacities:
4.65″ / 120 mm diameter x 0.4″ / 9.5 mm

1200 g to 6000 g capacities:
6.9″ x 6.9″ x 0.3″ / 175 mm x 175 mm x 8 mm

Packaging Dimension (L x W x H):
12.5" x 10.25" x 5.5" / 318 mm x 261 mm x 140 mm

Packaging Contents: 300 and 600 g has test weight, draft shield, manual, batteries and scale; 1200 g has test weight, batteries, manual and scale; 3000 and 6000 g has batteries, manual and scale

Certifications: Full FCC compliance, CE, UKCA, RoHS, WEEE

Part Number	Capacity	Ship Weight
816965004881	300 g x 0.005 g	4 lb
816965004898	600 g x 0.01 g	4 lb
816965004904	1200 g x 0.02 g	5 lb
816965004911	3000 g x 0.05 g	5 lb
816965004928	6000 g x 0.1 g	5 lb

B140

Features

- **Accuracy–** Within 0.01% of full load
- **Capacity–**
  12 lb x 0.0005 lb / 6 kg x 0.2 g
  30 lb x 0.001 lb / 15 kg x 0.5 g
  60 lb x 0.002 lb / 30 kg x 1 g
- **Construction–** Rugged ABS base, stainless steel weight platter
- **Power–** AC adapter with rechargeable battery with 20 hours battery life between charges
- **Display–** Three six digit 0.56″ / 14.2 mm high seven segment red LED with three brightness levels
- ***Currency Feature Added (60 lb / 30 kg only)–** US Dollars, GB Pounds and Euros with big and small bag selection

Specifications

Unit/*Currency: Units used to switch displayed weights between kg and lb. Currency used to switch between currency type (available in 60 lb/30 kg capacity only)

Minimum Piece Weight:
6 kg (0.05 g) 12 lb (0.0001 lb)
15 kg (0.1 g) 30 lb (0.0002 lb)
30 kg (0.2 g) 60 lb (0.0005 lb)

Power: Internal rechargeable battery giving 20 hours of use between charges. Recharge time approximately eight hours with 12 volt UK/EU/US power adapter with center positive (included).

Battery: 6V4A/Hr rechargeable lead-acid battery

Auto Off: Selectable between one and 30 minutes or off

Configurable RS-232

Configurable Scale ID

Average Working Current: < 300mA

Operator Keys: On/Off, clear, enter, zero, tare, total, kg/lb, piece weight, PLU, print, *currency, upper limit, lower limit and 0 – 9 for data entry

Annunciators: Zero, tare, AC mains connected, battery charging, stable, big bag, small bag, kg and lb

Keyboard Functionality: 0-9– Used for keyboard entry of piece weight, sample size, and upper and lower limit settings

Zero: Return displayed weight and count to zero for accurate weighing and counting. Zero range capability is 5% of scale capacity.

Enter/Pcwt: Enter used to confirm or save entered data from keyboard. Pcwt used for keyboard entry of a known average piece weight

Tare: Used to zero off (up to 100% of capacity) an empty container or weight, not required in the calculation of an average piece weight. Use of tare will reduce the scales maximum weight capacity by value stored

Total: Ability to add the display to an accumulator (Memory +) and only accumulate when there is a percentage of weight change

Clear/Hi/Lo: Clear to erase a keyed in value from the display if an error has been made. Hi/Lo is to set the upper and lower limits.

Upper: Used to set an upper limit quantity for count check

Lower: Used to set lower limit quantity for count check

On/Off: Used to turn off display for extended battery life or reset the scale to normal weighing mode

Print: Output to RS-232 communications

***Mode:** Toggle between counting functions

Operating Temperature: 14° F to 104° F / -10° C to 40° C

Scale Dimension (L x W x H):
11.5″ x 13.1″ x 4.3″ / 292 mm x 333 mm x 109 mm

Platter Dimension (L x W x H):
11.5″ x 13″ x 0.5″ / 222 mm x 292 mm x 13 mm

Product Weight: 6.5 lb / 2.9 kg

Packaging Dimension (L x W x H):
16″ x 14″ x 8″ / 406 mm x 356 mm x 203 mm

Certifications: NSF, UKCA, CE, full FCC compliance, Prop 65, CEC, ETL approved power adapter, NSF

Part Number	Capacity	Ship Weight
816965005758	12 lb x 0.0005 lb / 6 kg x 0.2 g	12 lb
816965005765	30 lb x 0.001 lb / 15 kg x 0.5 g	12 lb
816965005772	*60 lb x 0.002 lb / 30 kg x 1 g	12 lb

*60 lb / 30 kg capacity counting/coin scale

CS Series

Features

- **Accuracy–** Within 0.1% of full scale
- **Capacity–**
  1000 lb x 0.5 lb / 500 kg x 0.2 kg
  2000 lb x 1 lb / 1000 kg x 0.5 kg
- **Construction–** Aluminum die-cast case, alloy steel load cell, hook and shackle (safety load 150%)
- **Power–** Rechargeable battery or AC adapter (included). Remote control operates on two AA batteries (included).
- **Display–** 1.2" / 30 mm ultra-bright LED with adjustable brightness
- **Operator Keys–**
  Scale: On/Off, Tare, Zero
  Remote Control: Zero, tare, Hold, Clear, F1,F2, Off, M+ (Accumulator)

Specifications

Unit: lb, kg

Accumulator Function: Calculates total weight

Elongated Upper Shackle: Accommodates thick hooks

Swivel Hook with Latch: Makes load connection easy and secure

Factory Calibration: 39° latitude optimized

Ultimate Safety Factor: 400% F.S.

Safety Load: 150% F.S. of capacity

Remote Functions: Distance controls for zero, tare, hold, accumulator and power

Typical Battery Life: 20 hours between charges

Operating Temperature: 14° F to 104° F / -10° C to 40° C

Scale Dimension (L x W x H):
5.3″ x 8.5″ x 17″ / 135 mm x 215 mm x 430 mm

Packaging Dimension (L x W x H):
12″ x 11″ x 7.5″ / 305 mm x 280 mm x 190 mm

Part Number	Capacity	Volt	Ship Weight
816965001804	1000 lb x 0.5 lb / 500 kg x 0.2 kg	110V	13.5 lb
816965001811	2000 lb x 1 lb / 1000 kg x 0.5 kg	110V	13.5 lb

BCS Series

Features

EC Machinery Directive CE

- **Accuracy–** +/- 0.15% at full load
- **Capacity–** 6000 lb x 2 lb / 3000 kg x 1 kg 10,000 lb x 5 lb / 5000 kg x 2 kg
- **Construction–** Aluminum-casting case, high intensity hook and shackle
- **Power–** 9 VDC power adapter, 1000mA with center positive and 6V/4.0Ah lead acid rechargeable battery (both included). Remote control operates on two AA batteries (included).
- **Display–** 1.4" / 35 mm ultra-bright LED with three adjustable brightness levels
- **Operator Keys–** On/Off, Zero, Tare, Hold

Specifications

Unit: lb, kg

Elongated Upper Shackle: Accommodates thick hooks

Swivel Hook with Latch: Makes load connection easy and secure

Accumulator Function: Calculates total weight

Factory Calibration: 39° latitude optimized

Typical Battery Life: Depending on LED brightness and idle mode setting, battery works from 60 hrs to 200 hrs

Charging Time: Approximately 12 hours; red LED charging, green finished

Remote Functions: Zero, tare, hold, acc, del F1, F2, off, 2nd

Remote Distance: Minimum 10 m / 32′

Tare Range: 100% full scale

Zero Range: 4% full scale

Stable Time: ≤10 sec

Overload: 100% F.S. +9 divisions

Overload Indication: Internal counter at +9 divisions F.S.

Ultimate Safety Factor: 400% F.S.

Safety Load: 150% F.S. of capacity

Operating Temperature: 14° F to 104° F / -10° C to 40° C

Operating Humidity: 20° C ≤90%

Scale Dimension (L x W x H): 10" x 8" x 17" / 255 mm x 210 mm x 440 mm

Packaging Dimension (L x W x H): 23" x 10" x 12" / 600 mm x 270 mm x 310 mm

Accuracy Class: GB/T 11883-2002 Class III

Certifications: UKCA, CE, RoHS 3, WEEE, UL approved power supply, Prop 65, FCC Compliant, EC Machinery Directive

Part Number	Capacity	Ship Weight
816965006625	6000 lb x 2 lb / 3000 kg x 1 kg	28 lb
816965006632	10,000 lb x 5 lb / 5000 kg x 2 kg	28 lb

Food Service **Portion Control**
Light Industrial

NEW PRODUCT

Model 405-LCD

NSF Pending

Features

- **Accuracy–** Within ±3 divisions at full load
- **Capacity–**
  12 lb x 0.002 lb / 6 kg x 0.001 kg
  30 lb x 0.005 lb / 15 kg x 0.002 kg
- **Construction–** ABS plastic housing with food safe 304 stainless steel weight platter
- **Power–** 9 VDC 600mA adapter with UK, EC, USA plugs or four AA batteries (not included)
- **Display–** 5½ digits seven segments 0.65" / 16.5 mm high digit LCD backlit
- **Operator Keys–** Tare/Unit, On/Off/Zero

Specifications

Unit: lb, oz, lb/oz, kg, g

Battery Life: 38 hours

Operating Temperature: 41° F to 95° F / 5° C to 35° C

Scale Dimension (L x W x H):
12″ x 10" x 4.25" / 305 mm x 255 mm x 110 mm

Platter Dimension (L x W):
8.5" x 9.5" / 215 mm x 245 mm

Packaging Dimension (L x W x H):
15" x 12" x 7" / 385 mm x 305 mm x 180 mm

Certifications: UKCA, CE, CEC, FCC compliant, Prop 65, RoHS 3, UL/CUL power adapter, WEEE, NSF pending

Part Number	Capacity	Ship Weight
810036380218	12 lb x 0.002 lb / 6 kg x 1 g	10 lb
810036380201	30 lb x 0.005 lb / 15 kg x 2 g	10 lb

Accessories / Options

Part Number	Description	Ship Weight
AWT05-100540	9 VDC 600mA power adapter	0.8 lb

Model 430

Features

- **Accuracy–** Within 0.03% of full load
- **Capacity–**
  15 lb x 0.001 lb / 7 kg x 0.0005 kg
  30 lb x 0.002 lb / 15 kg x 0.001 kg
- **Construction–** ABS plastic housing with food grade 304 stainless steel weight platter
- **Power–** AC power adapter (included) and built-in rechargeable battery
- **Display–**
  Large 1.4" x 4" / 100 mm x 35 mm easy-to-read backlit LCD display with 1" / 25 mm high digits with color changing backlight
- **Operator Keys–** Tare/Unit, Zero

Specifications

Unit: lb, kg

Main Functionality: General weighing and check weighing with color changing backlight and audio under, accept and over buzzer

Tare: 100%

Battery Life: Up to 60 hours without backlight

Operating Temperature: 14° F to 104° F/ -10° C to 40° C

Scale Dimension (L x W x H):
12.3" x 10.3" x 4.3" / 313 mm x 263 mm x 109 mm

Platter Dimension (L x W):
10.3" x 8" / 263 mm x 204 mm

Product Weight: 6.8 lb / 3.1 kg

Packaging Dimension (L x W x H):
14.4" x 13.2" x 7.5" / 365 mm x 335 mm x 190 mm

Certifications: FCC, Prop 65, CEC, UL power adapter

Part Number	Capacity	Ship Weight
816965007219	15 lb x 0.001 lb / 7 kg x 0.0005 kg	8 lb
816965007226	30 lb x 0.002 lb / 15 kg x 0.001 kg	8 lb

FOOD SERVICE
MAIL ROOM

GENERAL PURPOSE
PORTION CONTROL

PS7

Features

- **Accuracy–** +/- 0.1%
- **Capacity–** 7 lb x 0.002 lb / 7 lb x 0.01 oz / 3.2 kg x 1 g
- **Construction–** ABS plastic
- **Power–** Two AAA batteries (included)
- **Display–** Seven segment LCD
- **Operator Keys–** On/Off/Tare, Unit

Specifications

Unit: lb, lb/oz, g

Max Capacity: 7.22 lb / 7 lb 15 oz / 3299 g

Overload Indication: Err is displayed

Auto Shut Off: 30 seconds after no activity

Low Battery Indication

Automatic Zero Tare

Operating Temperature: 50° F to 104° F / 10° C to 40° C

Storage Temperature: -14° F to 140° F / -10°C to 60° C

Scale Dimension (L x W x H):
6.5" x 5.5" x 5.76" / 165 mm x 140 mm x 146 mm

Platter Dimension (L x W):
5.5″ x 5.2″ / 140 mm x 133 mm

Display Dimension (L x W):
3.4″ x 1.4″ / 86 mm x 36 mm

Product Weight: 2.25 lb / 1 kg

Packaging Dimension (L x W x H):
8″ x 6″ x 7.5″ / 200 mm x 170 mm x 167 mm

Certifications: CE, FCC compliant, Prop 65, RoHS 3, WEEE

Part Number	Capacity	Ship Weight
816965005222	7 lb x 0.01 lb / 3.2 kg x 10 g	4 lb

GENERAL PURPOSE MAIL ROOM
PORTION CONTROL

311

Features

- **Accuracy–** 0.06% of full scale
- **Capacity–** 11 lb x 0.1 oz / 5000 g x 1 g
- **Construction–** ABS plastic injection molded case and platter
- **Power–** Four AA batteries (included)
- **Display–** 0.6" / 15 mm high digits LCD
- **Operator Keys–** On/Tare, Off, Unit

Specifications

Unit: lb/oz, kg, g

Operating Temperature: 50° F to 104° F / 10° C to 40° C

Scale Dimension (L x W x H):
9.5″ x 6.75″ x 1.5″ / 241 mm x 171 mm x 38 mm

Platter Dimension:
5.875" / 149 mm diameter

Product Weight: 1.05 lb / 0.47 kg

Packaging Dimension (L x W x H):
10.75" x 8" x 2.25" / 274 mm x 204 mm x 58 mm

Certifications: UKCA, CE, RoHS 3, WEEE, FCC,Prop 65, NSF

Part Number	Capacity	Ship Weight
816965001316	11 lb x 0.1 oz / 5000 g x 1 g	2 lb

PS25

Features

- **Accuracy–** 0.1% of full capacity
- **Capacity–** 25 lb x 0.2 oz / 11.5 kg x 0.02 kg
- **Construction–** ABS case with flip up roll and flat holder
- **Power–** Four AAA batteries or USB cable (both included)
- **Display–** 0.6″ / 15 mm digits with backlight
- **Operator Keys–** On/Off/Tare, Unit

Specifications

Unit: lb/oz, kg, g

Dual Resolution:
0 - 2 lb x 0.1 oz / 2 - 25 lb x 0.2 oz
0 - 1 kg x 0.01 kg / 1 - 11.5 kg x 0.02 kg
0 - 1000 g x 5 g / 1000 - 12000 g x 10 g

Operating Humidity Range: 20% to 90%

Auto Shut Off: 120 seconds after no activity

Overload: 120% of capacity

Low Battery Indication

Automatic Zero Tare

Operating Temperature: 50° F to 104° F / 10° C to 40° C

Storage Temperature: -14° F to 140° F / -10°C to 60° C

Scale Dimension (L x W x H):
8.5″ x 5.9″ x 2″ / 216 mm x 150 mm x 52 mm

Platter Dimension (L x W):
8" x 5.9" / 203 mm x 150 mm

Product Weight: 2 lb / 0.9 kg

Packaging Dimension (L x W x H):
10.75″ x 8″ x 4″ / 273 mm x 203 mm x 101 mm

Certifications: UKCA, CE, RoHS 3, WEEE, FCC, Prop 65

Part Number	Capacity	Ship Weight
816965005239	25 lb x 0.2 oz / 11.5 kg x 0.02 kg	2.25 lb

LIGHT INDUSTRIAL
MAIL ROOM
WAREHOUSE

GP100 USB / GP250 USB

Features

- **Accuracy–** ±3 displayed divisions
- **Capacity–**
  100 lb x 0.2 lb / 45 kg x 0.1 kg
  250 lb x 0.5 lb / 110 kg x 0.2 kg
- **Construction–** 22 gauge steel with ribbed base
- **Power–** One 9V battery (included), AC adapter or USB cable (not included)
- **Display–** Four large 1″ / 25 mm H digits, backlit LCD
- **Operator Keys–** Zero, Tare, Unit

Specifications

Unit: lb, kg

Communication: USB virtual COM port (cable not included)

Discrete Switch Keyboard Technology: Unique key button design to ensure reliability and longevity

Electro-Mechanical Design: Ensures greater accuracy even at higher weigh capacities

Keyboard Functions:

HOLD: Freezes weight on the display only when a weight of 3 lbs or more is placed on the scale

TARE: Removes weight of empty container or item placed on the scale to obtain a net weight

UNITS: Scrolls between kilograms and pounds. Turns scale on or off and returns scale to zero weight.

Indicator Displayed Messages:

L0: Battery is weak. After five minutes scale will turn off.

Auto Zero Tracking**:** Includes AZT (Auto Zero Tracking) at 0.5 or manual push button to re-establish zero reference when displayed weight is less than 2% of capacity

Overload Capacity: Capable of withstanding 200 kg or 400 lb of weight without damaging the scale

Auto Shutdown: To conserve battery life the display will shutdown after two minutes of non-use. Can be configured via the keypad for Off, two or four minutes.

Operating Temperature: 42° F to 104° F / 5° C to 40° C

Scale **Dimension (L x W x H):**
10.95″ x 12.50″ x 2.20″ / 278 mm x 318 mm x 56 mm

Product Weight: 6 lb / 3 kg

Packaging Dimension (L x W x H):
13.35″ x 13.5″ x 3″ / 339 mm x 318 mm x 76 mm

Certifications: UKCA, CE, RoHS 3, WEEE, FCC

Part Number	Capacity	Ship Weight
816965006755	100 lb x 0.2 lb / 45 kg x 0.1 kg	8 lb
816965006731	250 lb x 0.5 lb / 110 kg x 0.2 kg	8 lb

Accessories / Options

Part Number	Description	Ship Weight
AWT25-501988	USB A to USB B 3 m cable	0.15 lb

PS150 and PS400 Slimline

Features

- **Accuracy–** 0.25%
- **Capacity–**
  150 lb x 0.1 lb / 70 kg x 0.05 kg
  400 lb x 0.2 lb / 180 kg x 0.1 kg
- **Construction–** Low profile, portable, aluminum diecast base with ribbed and powder coated top plate. ABS desktop and wall mount indicator casing.
- **Power–** 9V 1A power supply with USA/UK adapters (included) or four AA batteries (not included)
- **Display–** Easy-to read 1.2" / 30 mm high LCD
- **Operator Keys–** Tare, On/Off, Unit

Specifications

Unit: lb, lb/oz, kg

Base Construction: Low profile, hard-wearing die cast base with ribbed top surface and a powder coated finish (110% overload protection)

Indicator: Easy-to-read 1.2" / 30 mm high digits, backlit LCD display in a compact, lightweight, and rugged ABS housing with 2 - 10 feet / 60 cm - 3 m coiled cable. Desktop and wall mount.

Features: General weighing in lb, lb/oz, or kg with autopower off if not used for five minutes

Battery Life: Up to 168 hours

Platform Dimension (L x W):
12″ x 12″ x 1" / 300 mm x 300 mm x 25 mm

Product Weight: 3.5 lb / 1.5 kg

Packaging Dimension (L x W x H):
19.3" x 13.1" x 1.97" / 490 mm x 332 mm x 49 mm

Certifications: FCC compliant, Prop 65, UL/CUL power adapter, UKCA, CE, RoHS 3, WEEE

Part Number	Capacity	Ship Weight
816965007516	150 lb x 0.1 lb / 70 kg x 0.05 kg	4.2 lb
816965007530	400 lb x 0.2 lb / 180 kg x 0.1 kg	4.2 lb

LIGHT INDUSTRIAL
FOOD SERVICE
SHIPPING
WAREHOUSE

LPS15 / LPS150 / LPS400

Features

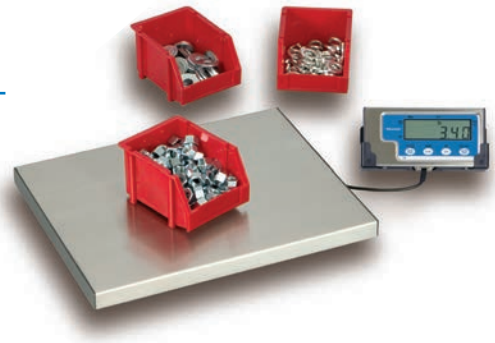

- **Accuracy–** Within 0.1% of full load
- **Capacity–**
  30 lb x 0.01 lb / 15 kg x 0.005 kg
  150 lb x 0.05 lb / 68 kg x 0.02 kg
  400 lb x 0.2 lb / 182 kg x 0.1 kg
- **Construction–** Low profile stainless steel platform with mild steel understructure, stainless steel/ABS indicator with wall bracket and desk mount (included)
- **Power–** Four AAA batteries or AC adapter (LPS15/LPS150), Four AAA batteries (LPS400)
- **Display–** Five digit 0.65″ / 17 mm digits with seven segment LCD
- **Operator Keys–** On/Off/Zero, Tare, Unit, Hold/Print

Specifications

Unit: lb, lb/oz, kg

COMM Port: RS-232, 10′ / 3 m interface cable (included)

Battery Life: 20 hours

Operating Temperature: 41° F to 95° F / 5° C to 35° C

Platform Dimension (L x W x H):
15″ x 12″ x 1″ / 380 mm x 305 mm x 27 mm

Indicator Dimension (L x W x H):
6.5″ x 3.2″ x 1.2″ / 164 mm x 81 mm x 29 mm

Product Weight: 9 lb / 4 kg

Packaging Dimension (L x W x H):
17″ x 15″ x 2.3″ / 450 mm x 400 mm x 60 mm

Packaging Contents: RS-232 cable, power adapter, four AAA batteries, manual, platform with indicator and bracket with miscellaneous hardware

Certifications: FCC compliant, Prop 65, ETL power adapter

Part Number	Capacity	Ship Weight
816965004799	30 lb x 0.01 lb / 15 kg x 0.005 kg	11 lb
816965001224	150 lb x 0.05 lb / 68 kg x 0.02 kg	11 lb
816965006182	400 lb x 0.2 lb / 182 kg x 0.1 kg	11 lb

General Purpose **Manifest Sys.**
Mail Room **Shipping/Receiving**

PS-USB

Features

Measurement Canada Approval

- **Accuracy–** NTEP at 3000d (3500d for the 70 lb), Class III
- **Capacity–**
  30 lb x 0.01 lb / 15 kg x 0.005 kg
  70 x 0.02 lb / 30 kg x 0.01 kg
  150 lb x 0.05 lb / 60 kg x 0.02 kg
- **Construction–** Durable cast aluminum upper load cell supporter and cast aluminum base with removable stainless steel platter
- **Power–** 9 VDC 600mA adapter with center positive (included) or four AA batteries (not included) or USB (VCP) cable (included)
- **Display–** 6½ digits 1" / 25 mm high, seven segments LCD with blue backlight
- **Operator Keys–** Hold/Setup, Print/Func, Acc/Total, Unit/Data, Tare/Preset, On/Off/Zero

Specifications

Unit: lb, lb/oz* (*non-NTEP), kg

Emulation Protocols: Standard NCI default with field configurable settings of NCI, 8213, 3835 and Autosend. Interfaces with software programs such as UPS™ Worldship Online.

RS-232/USB (VCP): Bi-directional full duplex (USB and RS-232 cables included)

Other Functions: Weighing, counting, check weighing, percent weighing, accumulation

Battery Life: 20 hours

Operating Temperature: 14° F to 104° F / -10° C to 40° C

Scale Dimension (L x W x H):
16" x 14" x 3.15" / 411 mm x 355 mm x 80 mm

Platform Dimension (L x W):
14" x 12" / 355 mm x 305 mm

Product Weight: 10 lb / 5 kg

Packaging Dimension (L x W x H):
20" x 18" x 6" / 505 mm x 465 mm x 150 mm

Certifications: NTEP CC# 15-084 / Measurement Canada AM-6006 (SBI-240), NTEP CC# 15-083 / Measurement Canada AM-5998 (PS-USB base), Base NSF listed

Part Number	Capacity	Ship Weight
816965006540	30 lb x 0.01 lb / 15 kg x 0.005 kg	14 lb
816965006533	70 lb x 0.02 lb / 30 kg x 0.01 kg	14 lb
816965006526	150 lb x 0.05 lb / 60 kg x 0.02 kg	14 lb

FOOD SERVICE
LIGHT INDUSTRIAL
SHIPPING
WAREHOUSE

3900LP Base with SBI 110 LCD Indicator

Features

- **Accuracy–** NTEP 5000 divisions
- **Capacity–**
  100 lb x 0.02 lb / 45 kg x 0.01 kg
  250 lb x 0.05 lb / 113 kg x 0.02 kg
  600 lb x 0.2 lb / 272 kg x 0.1 kg
- **Construction–** Carbon steel fabricated frame with food grade 304 stainless steel top pan and NTEP approved, ABS housed indicator
- **Power–** 12V 1A power adapter (included) with built-in recharge-able battery
- **Display–** Large 2" x 6.5" / 50 mm x 165 mm easy-to-read backlit display with 1.6" / 40 mm high digits
- **Operator Keys–** Units, Select, Print, Zero, Tare

Specifications

Unit: lb, kg

General Weighing: Designed to weigh in lb, kg or pieces, the 3900LP can easily be set into sample mode - ideal for counting a wide range of medium sized components.

Check Weighing & Check Counting: Ideal for guaranteeing product or box quantities are within an agreed weight or count size and for repetitive packing applications

Base Construction: 150% overload protection, this powder coated base frames is constructed using carbon steel tubular fabricated frame with four corner stops for extra load cell protection. The base frame is fitted with four large lockable adjustable anti-slip feet ideal for leveling the base if positioned on uneven ground.

Load Cell: This NTEP approved base is fitted with a robust approved aluminum IP65 (NEMA 4) load cell and a pole mounted ABS NTEP approved indicator

Top Pan: The base is fully covered with a removable hard-wearing, food grade 304 stainless steel top pan

Operating Temperature: 14° F to 104° F / -10° C to 40° C

Pole Dimension: 25.5" / 650 mm high

Platform Dimension (L x W x H):

Capacity	Dimension (in)	Dimension (cm)
100 lb / 45 kg	15.7 x 15.7 x 5.3	40 x 40 x 12
250 lb / 113 kg	15.7 x 19.7 x 5.7	40 x 50 x 15
600 lb / 272 kg	19.7 x 23.6 x 5.7	50 x 60 x 15

Packaging Dimension (L x W x H):

Capacity	Dimension (in)	Dimension (cm)
100 lb / 45 kg	31.3 x 20.7 x 6.5	76.5 x 52.5 x 16.5
250 lb / 113 kg	35.2 x 20.7 x 6.5	89.5 x 52.5 x 16.5
600 lb / 272 kg	38.7 x 24.6 x 7.2	98.5 x 62.5 x 18.5

Certifications: Indicator 5000d NTEP CC #18-125, base 5000d NTEP CC #18-124, FCC, CEC, Prop 65, UL power adapter

Part Number	Capacity	Ship Weight
816965007332	100 lb x 0.02 lb / 45 kg x 0.01 kg	29 lb
816965007349	250 lb x 0.05 lb / 113 kg x 0.02 kg	32 lb
816965007356	600 lb x 0.2 lb / 272 kg x 0.1 kg	58 lb
816965007363	SBI 110 Indicator (NTEP)	5 lb

Accessories / Options

Part Number	Description	Ship Weight
AWT15-501905	RS-232 board	1 lb

LIGHT INDUSTRIAL
LIVESTOCK
SHIPPING
WAREHOUSE

PS500

Features

- **Accuracy–** 0.2% of full capacity
- **Capacity–** 500 lb x 0.2 lb / 500 lb x 5 oz / 250 kg x 0.1 kg
- **Construction–** Low profile stainless steel platform with mild steel understructure and stainless steel/ABS indicator and a rubber slip mat
- **Power–** Four AAA batteries or 9 VDC, 600mA adapter (both included)
- **Display–** Five digit 0.65″ / 17 mm digits with seven segment LCD
- **Operator Keys–** On/Off/Zero, Tare, Unit, Hold/Print

Shown with optional floor stand

Specifications

Unit: lb, lb/oz, kg

Functions: Weight hold, stable weight indicators with auto power off

Overload Capacity: Capable of withstanding 150% capacity of weight without damaging scale

RS-232: Supplied complete with 10′ cable (nine pin to nine pin type connector, bi-directional full duplex)

Calibration: Front panel accessible

Battery Life: Battery life approximately 20 hours continuous

Operating Temperature: 41° F to 95° F / 5° C to 35° C

Indicator Dimension (L x W x H):
6.5″ x 1.2″ x 3.2″ / 165 mm x 30 mm x 81 mm

Indicator Packaging Dimension (L x W x H):
9.25″ x 7.25″ x 3″ / 235 mm x 184 mm x 76 mm

Platform Dimension (L x W x H):
22″ x 22″ x 2″ / 559 mm x 559 mm x 51 mm
36″ x 22″ x 2″ / 906 mm x 559 mm x 51 mm
42″ x 22″ x 2″ / 1067 mm x 559 mm x 51 mm

Packaging Dimension (L x W x H):
22″ x 22″: 26″ x 24″ x 4″ / 660 mm x 609 mm x 101 mm
36″ x 22″: 39″ x 24″ x 4″ / 965 mm x 609 mm x 101 mm
*42″ x 22″: 44″ x 24″ x 4″ / 1117 mm x 609 mm x 101 mm

Options (not included) (L x W x H):
Floor Stand:
13.8″ x 13.8″ x 1″ / 350 mm x 350 mm x 25 mm
Overall Height: 37″ / 940 mm
Weight: 10 lb / 4.5 kg

Certifications: CE, FCC compliance, ETL power adapter, WEEE directive

*Note: With rubber mat

Part Number	Platform Size	Capacity	Ship Weight
816965001903	22″ / 559 mm	500 lb x 0.2 lb / 250 kg x 0.1 kg	35 lb
816965001897	36″ / 906 mm	500 lb x 0.2 lb / 250 kg x 0.1 kg	37 lb
816965001453	42″ / 1067 mm	500 lb x 0.2 lb / 250 kg x 0.1 kg	63 lb

Accessories / Options

Part Number	Description	Ship Weight
810036380355	Indicator floor stand	12 lb

Shown with rubber mat

LIGHT INDUSTRIAL
LIVESTOCK
SHIPPING
WAREHOUSE

DS1000-LCD with SBI 210 LCD

Features

- **Accuracy–** Within 0.1%
- **Capacity–** 1000 lb x 0.5 lb / 500 kg x 0.2 kg
- **Construction–** Powder coated rugged smooth steel deck structure and built-in ramps, fitted with two handles and wheels for relocating the scale. Robust ABS plastic indicator with bench or pole brackets for mounting.
- **Power–**9V 600mA universal power supply with USA/UK/EU adapters (included) or six AA batteries (not included)
- **Display–** Six large, easy-to read 1.5″ / 38 mm high digits, large seven segment LCD with white backlight
- **Operator Keys–** On/Off/Zero, Tare, Unit, Print, Hold, Accumulate/Total

Indicator Specifications

Unit: lb, kg, pcs, %

Tare: 100% subtractive

Check Weighing: Used when packing or filling to a set weight

Counting: Used for stock control or items within a box

Accumulation: Used to get the final consignment weight total

Hold: Captures and holds a stable weight on screen

Percentage: Used to carry out weightments on % basis

Communication: One USB (VCP) and one RS-232 bi-directional full duplex port. Optional COM cables

Print Format: Configurable

Indicator Mounting: Desk or pole mountable, either vertically or horizontally

Operating Temperature: -14º F to 104º F / -10º C to 40º C

Indicator Dimension (L x W x H):
9.5″ x 4.9″ x 2.5″ / 241 mm x 125 mm x 64 mm

Packaging Dimension (L x W x H):
5″ x 9″ x 4.5″ / 385 mm x 230 mm x 122 mm

Part Number	Capacity	Ship Weight
810036380270	1000 lb x 0.5 lb / 500 kg x 0.2 kg	106.7 lb

Accessories / Options

Part Number	Description	Ship Weight
810036380355	Indicator floor stand	11 lb
AWT05-504386	Guard rail kit	11 lb

Floor Specifications

Load Cell: 4-planner beam load cells connect to the ABS junction box with 10 ft / 3 m interface cable

Product Dimension:

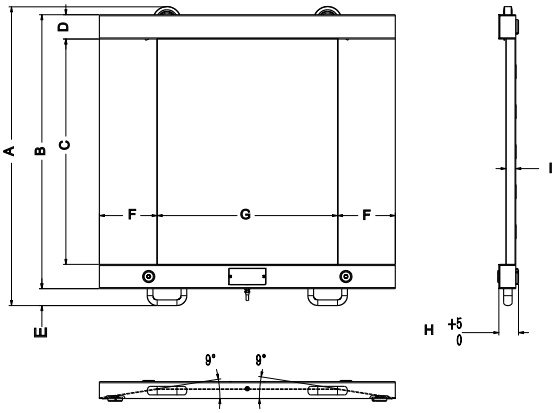

	in.	mm
A	45.7	1060
B	38.3	972
C	31.4	800
D	4.4	86
E	2.4	60
F	8.1	205
G	25.1	640
H	2.75	70
I	1.4	35

Portable: Fitted with two handles and wheels to easily relocate

Ramp: Designed with built-in 9 degree gradual angle to make entry and exit safe and easy

Product Weight: 103.4 lb / 47 kg

Packaging Dimension (L x W x H):
47.6″ x 47.2″ x 8.0″ / 1210 mm x 1200 mm x 205 mm

Packaging Contents: DS1000-LCD platform, indicator, power supply with USA/US/EU plugs and indicator desk and pole mounting brackets

Certifications: FCC compliant, Prop 65, ETL power adapter, UKCA, CE, RoHS 3, WEEE

LIGHT INDUSTRIAL
LIVESTOCK
SHIPPING
WAREHOUSE

DCSB Series (deck only)

Features

- **Accuracy–**NTEP at 5000d, Class III
- **Capacity–** 2500 x 0.5 lb / 1250 kg x 0.2 kg 5000 lb x 1 lb / 2500 kg x 0.5 kg 10,000 lb x 2 lb / 5000 kg x 1 kg
- **Construction–** Carbon steel fabrication with ¼" / 6 mm thick safety tread top plate & heavy duty welded channel under structure,150% overload protection
- **Versatile–** Pit mounted or free standing
- **Low Profile–** 3.1" / 91 cm high; 1.75" / 44 mm adjustable leveling feet
- **Warranty–** Includes a three year parts on DCSB deck from time of purchase. Consult factory.

Specifications

J-Box: IP65 ABS junction box with floor scale top access for easy installation and service

Leveling Feet: Four adjustable leveling feet with top hole access for a quick adjustment

Threaded Eye Bolts: Two threaded top access eye-bolt holes for easy mobility and pit service

Corner Protection: Closed corners to prevent damage to leveling feet

Load Cell: NTEP approved, waterproof IP67 potted 350 ohm +/-3.5Ω alloy steel load cells

Load Cell Rated Output: 3 mV/V

Overload Protection: 150% of rated capacity

Certifications: NTEP CC #02-070

Part Number	Model	Platform Size (L x W)	Capacity	Ship Weight
810036380010	DCSB3636-02	36" x 36" / 915 x 915 mm	2500 lb x 0.5 lb / 1250 kg x 0.2 kg	170 lb
56977-0019	DCSB4848-05	48" x 48" / 1220 x 1220 mm	5000 lb x 1 lb / 2500 kg x 0.5 kg	290 lb
810036380027	DCSB5959-05	59" x 59" / 1500 x 1500 mm	5000 lb x 1 lb / 2500 kg x 0.5 kg	420 lb
56977-0209	DCSB4848-10	48" x 48" / 1220 x 1220 mm	10,000 lb x 2 lb / 5000 kg x 1 kg	286 lb
810036380034	DCSB5959-10	59" x 59" / 1500 x 1500 mm	10,000 lb x 2 lb / 5000 kg x 1 kg	448 lb

Note: Multiple packs of five+ are available upon request.

Accessories / Options

Part Number	Description / Capacity	Ship Weight
810036380355	SBI 240 indicator floor stand	11 lb
52775-0020	Ramp end with brackets, 48" W x 36" L / 1220 (W) x 915 mm (L)	220 lb
52775-0038	Ramp end with brackets, 60" W x 36" L / 1524 (W) x 915 mm (L)	301 lb
41180-0048	Pit frame, 48" x 48" / 1220 x 1220 mm	68 lb
41180-0089	Pit frame, 60" x 60" / 1524 x 1524 mm	86 lb
28209-0026	Floor mounting plates, 2500-5000 lb, set of four	11 lb
28213-0020	Floor mounting plastes, 10,000 lb, set of four	11 lb

LIGHT INDUSTRIAL
LIVESTOCK
SHIPPING
WAREHOUSE

DCSB Floor Scale with SBI 240 LCD Indicator

Features

- **Accuracy–** NTEP 5000d, Class III
- **Capacity–**
  2500 lb x 0.5 lb / 1250 kg x 0.2 kg
  5000 lb x 1 lb / 2500 kg x 0.5 kg
  10,000 lb x 2 lb / 5000 kg x 1 kg
- **Construction–** Mild steel with powder coat paint finish. 0.25" / 6 mm thick top plate and heavy duty welded channel support. Die cast aluminum indicator with adjustable steel stand.
- **Power–** 9V 600mA power supply with USA/UK/EU adapters (included) and four AA batteries (not included)
- **Display–** 6½ digits 1" / 25 mm high, large seven segment LCD with white backlight
- **Operator Keys–** Setup, Print/ Func, Acc/Total, Unit/ Data,Tare/ Preset, Zero/On/Off
- **Warranty–** Includes three year parts on DCSB deck from time of purchase. Consult factory.

Indicator Specifications

Unit: lb, oz, lb/oz, kg, g, pcs, %

Functions: Weighing, check weighing and accumulation

Annunciators: -0-, motion, gross, net, tare, total, lo-ok-hi, lb, kg, print

Power: 9V 600mA, 110-230V switch mode external power supply with USA/UK/EU interchangeable plug adapters

Battery: Four AA batteries (not included)

Excitation Voltage: 5 VDC up to 55mA

Communication: One USB (VCP) and one RS-232 bi-directional full duplex port. Optional COM cables.

Calibration: Front panel, multi-point

Floor Scale Connection: 9.8" / 250 mm cable is fixed to indicator side with quick release connector. An additional 14.76' / 4.5 m of cable is connected to the floor scale junction box.

Accessories: See DCSB Series (deck only) and SBI 240 Indicator page

Floor Specifications

J-Box: Weatherproof IP65 ABS housing with top access for ease of installation and service

Leveling Feet: Four top access holes for a quick installation

Threaded Eye Bolts: Four threaded top access eye-bolt holes for easy mobility and pit service

Corner Protection: Closed corners to prevent damage to leveling feet while installing the scale

Load Cell: Four waterproof IP67, NTEP approved, 350 Ohm ± 3.5 load cells

Load Cell Rated Output: 3 mV/V

Overload Protection: 150% of rated capacity

Certifications: NTEP CC #15-084, Class III, Measurement Canada AM-6006 (indicator) and CC #02-070 (base), Prop 65, ETL power adapter, UKCA, CE, RoHS 3, WEEE

Part Number	Model	Platform Size (L x W)	Capacity	Ship Weight
810036380041	DCSB3636-02	36" x 36" / 915 x 915 mm	2500 lb x 0.5 lb / 1250 kg x 0.2 kg	170 lb
810036380058	DCSB4848-05	48″ x 48″ / 1220 x 1220 mm	5000 lb x 1 lb / 2500 kg x 0.5 kg	320 lb
810036380072	DCSB5959-05	59″ x 59″ / 1500 x 1500 mm	5000 lb x 1 lb / 2500 kg x 0.5 kg	495 lb
810036380065	DCSB4848-10	48″ x 48″ / 1220 x 1220 mm	10,000 lb x 2 lb / 5000 kg x 1 kg	315 lb
810036380089	DCSB5959-10	59″ x 59″ / 1500 x 1500 mm	10,000 lb x 2 lb / 5000 kg x 1 kg	475 lb

Note: Multiple packs of five+ are available upon request.

LIGHT INDUSTRIAL
LIVESTOCK
SHIPPING
WAREHOUSE

DCSB Floor Scale with SBI 521 LED Indicator

Features

- **Accuracy–** NTEP 5000d, Class III
- **Capacity–**
  5000 lb x 1 lb / 2500 kg x 0.5 kg
  10,000 lb x 2 lb / 5000 kg x 1 kg
- **Construction–** Carbon steel fabrication with ¼" / 6 mm thick safety tread top plate & heavy duty welded channel under structure,150% overload protection
- **Power–** 6 volt 4 AH rechargeable internal lead acid battery with 110/220 AC internal transformer
- **Display–** 0.7"/ 17 mm LED
- **Operator Keys––** Hold/Setup, Print/Func, N/G/Total, Unit/Data, Tare/Preset, Zero/On/Off
- **Warranty–** Includes three year parts on DCSB deck from time of purchase. Consult factory.

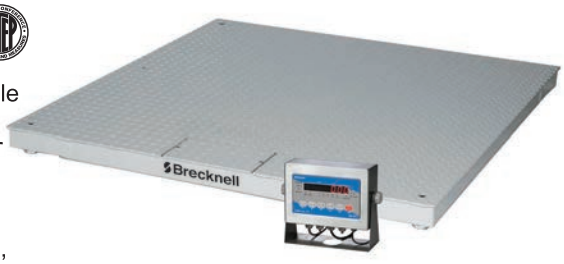

Indicator Specifications

Unit: lb, kg

Power: 6V 4 AH rechargeable internal lead acid battery with 110/220 AC internal transformer

Serial Port 1: Full-duplex RS-232

Serial Port 2: Full-duplex RS-232 or half-duplex RS-485

Digital Calibration: Front panel calibration and configuration

Functions: Motion, zero, net, gross, tare, total, lb, kg, %, pcs, oz, peak/hold, hi, ok, lo, ac/chg

Display: Up to 50,000 graduations

Certifications: NTEP at 5,000d, Class III, CC #11-119

Accessories: See DCSB Series (deck only) and SBI 521 Indicator page

Floor Specifications

J-Box: IP65 ABS housing with top access for ease of installation and service

Leveling Feet: Four top access holes for a quick installation

Threaded Eye Bolts: Two threaded top access eye-bolt holes for easy mobility and pit service

Corner Protection: Closed corners to prevent damage to leveling feet while installing the scale

Interface Cable Length: 15' / 4.5 m with tinned leads (included)

Load Cell: NTEP approved, IP67 potted 350 ohm +/- 3.5Ω

Overload Protection: 150% of rated capacity

Part Number	Model	Platform Size (L x W)	Capacity	Ship Weight
816965005352	DCSB4848-05	48″ x 48″ / 1219 x 1219 mm	5000 lb x 1 lb / 2500 kg x 0.5 kg	320 lb
810036380096	DCSB5959-05	59″ x 59″ / 1500 x 1500 mm	5000 lb x 1 lb / 2500 kg x 0.5 kg	495 lb
816965005376	DCSB4848-10	48″ x 48″ / 1219 x 1219 mm	10,000 lb x 2 lb / 5000 kg x 1 kg	315 lb
810036380102	DCSB5959-10	59″ x 59″ / 1500 x 1500 mm	10,000 lb x 2 lb / 5000 kg x 1 kg	475 lb

Note: Multiple packs of five+ are available upon request.

LIGHT INDUSTRIAL
VETERINARY
SHIPPING
WAREHOUSE

SBI 140

Features

- **Resolution–** Displayed up to 1:10,000; internal 1:520,000
- **Construction–** Stainless steel/ ABS case, complete with wall bracket and desk mount
- **Power–** Four AAA batteries or 9 VDC, 600mA adapter (both included)
- **Display–** Five digit 0.65″ / 17 mm digits with seven segment LCD
- **Operator Keys–** On/Off/Zero, Tare, Unit, Hold/Print

Specifications

Unit: lb, lb/oz, kg

Protocol: Standard NCI interfaces to most common shipping software including, UPS™ Worldship Online and FedEx®. Not legal for trade.

Capabilities: Drives up to four load cells; compatible with all Brecknell platforms and any system with up to four 350 Ohm load cells 4.4 VDC, up to 55mA

Connection: 7.7″ / 200 mm cable fixed to indicator with connector. Additional 16.4′ / 5 m pigtail cable with connector that attaches to the indicator connector.

RS-232: Supplied complete with 10′ / 3 m cable (nine pin to nine pin type connector, bi-directional full duplex)

Annunciators: Zero, net, hold, kg/lb

Calibration: Front panel accessible

Battery Life: Battery life approximately 20 hours continuous

Operating Temperature: 41° F to 95° F / 5° C to 35° C

Scale Dimension (L x W x H):
6.5″ x 1.2″ x 3.2″
165 mm x 30 mm x 81 mm

Options (not included) (L x W x H):
Floor Stand:
13.8″ x 13.8″ x 1″ / 350 mm x 350 mm x 25 mm
Overall Height: 37″ / 940 mm
Weight: 10 lb / 4.5 kg

Packaging Dimension (L x W x H):
9.25″ x 7.25″ x 3″ / 235 mm x 184 mm x 76 mm

Certifications: Full FCC compliance, ETL power adapter, CE, UKCA, WEEE

Part Number	Description	Ship Weight
52751-0556	SBI 140 LCD Indicator	3 lb

Accessories / Options

Part Number	Capacity	Ship Weight
810036380355	Indicator floor stand	11 lb

LIGHT INDUSTRIAL WAREHOUSE
VETERINARY/MEDICAL

SBI 210

Features

- **Resolution–** 100 -100,000d primary; 25 - 125,000d secondary. Unapproved.
- **Construction–** Rugged ABS enclosure housing with both desk and pole mounting brackets
- **Power–** 9V 600mA universal power supply with USA/UK/EU adapters (included) or six AA batteries (not included)
- **Display–** Six large, easy-to-read 1.5″ / 38 mm high digits, large seven segment LCD with white backlight
- **Operator Keys–** On/Off/Zero, Tare, Unit, Print, Hold, Accumulate/Total

Specifications

Scales Functionality: Designed to be easy and simple to use. Ideal for most general weighing, veterinary or medical applications.

Unit Switching: lb, kg, pcs, %

Tare: 100% subtractive. Ideal for portion control applications.

Check Weighing: Used when packing or filling to a set weight. This provides the operator a fast & simple visual to let them know the product is within the accepted weight window.

Counting: Used for stock control or to quickly work out the quantity of items within a box

Accumulation: Used to get the final consignment weight total

Hold: This SBI 210 indicator has three main hold functions: manual hold, automatic hold and animal averaging hold making it ideal for a wide range of weighing applications.

Percentage: Used to carry out weightments on % basis

BMI (MS1000-LCD): Calculates the Body Mass Index (BMI)

Indicator Mounting: Can be desk mounted or pole mounted either vertically or horizontally

Battery Life: 24 hours with backlight, 37 hours without

Communication: One USB (VCP) and One RS-232 bi-directional full duplex port (optional COM cables)

Calibration: Front panel accessible

Load Cell Capability: Can run up to four 350 Ohm load cells

Indicator Connection: 9.8" / 250 mm cable is fixed to indicator side with quick release connector. An additional 14.76' / 4.5 m of cable connects to the floor scale junction box (consult factory).

Annunciators: -0-, motion, gross, net, tare, hold, pcs, %, HI/OK/LOW, battery, accumulation

Operating Temperature: 14° F to 104° F / -10° C to 40° C

Dimensions (L x W x H):
9.5" x 4.9" x 2.5"
241 mm x 125 mm x 64 mm

Packaging Dimension (L x W x H):
5" x 9" x 4.5"
385 mm x 230 mm x 122 mm

Certifications: FCC compliant, Prop 65, ETL power adapter, UKCA, CE, RoHS 3, WEEE

Part Number	Description	Ship Weight
81003630287	SBI 210 LCD Indicator	4.4 lb

Note: MS1000-LCD Indicator, consult factory.

Accessories / Options

Part Number	Capacity	Ship Weight
810036380355	Indicator floor stand	11 lb
AWT05-100562	14.7' interface cable	5 lb
AWT05-100563	SBI 100 converter	0.4 lb
AWT05-507974	5.9' USB cable	0.5 lb
1140-13842	10' RS-232 cable	0.5 lb

LIGHT INDUSTRIAL WAREHOUSE
VETERINARY

SBI 240

Features

Measurement Canada Approval

- **Accuracy–** NTEP and Canadian approved for 5000d, Class III
- **Resolution–** 100-100,000d primary units / 100-125,000d second unit
- **Construction–** Robust die cast aluminium indicator housing with adjustable steel desk/wall bracket
- **Power–** 9V 600mA, 110-230V switch mode external power supply and comes standard with USA/UK/EU interchangeable plug adapters or four AA batteries (not included)
- **Display–** 6½ digits 1" / 25 mm high, large seven segment LCD with white backlight
- **Operator Keys–** Setup, Print/ Func, Acc/Total, Unit/ Data, Tare/ Preset, Zero/On/Off

Specifications

Unit: lb, oz, lb/oz, kg, g, pcs, %

Protocol: Standard NCI interfaces to most common shipping software including, USPS™ Worldship Online

Functions: Weighing, counting, check weighing, percentage weighing and accumulation

Load Cell Capability: Can run up to four 350 Ohm load cells

Excitation: 5 VDC up to 55mA

Internal ADC: 16,000,000

Indicator Connection: 9.8" / 250 mm cable is fixed to indicator side with quick release connector. An additional 14.76' / 4.5 m of cable connects to the floor scale junction box (included).

Communication: One USB (VCP) and One RS-232 bi-directional full duplex port

Part Number	Description	Ship Weight
816965006960	SBI 240 LCD Indicator	3 lb

Accessories / Options

Part Number	Capacity	Ship Weight
810036380355	Indicator floor stand	11 lb
AWT05-507974	5.9' USB cable	0.5 lb
1140-13842	10' RS-232 cable	0.5 lb

Annunciators: -0-, motion, gross, net, tared, total, pcs, lb, kg, lo, ok, hi

Calibration: Front panel accessible

Battery Life (One Load Cell): 35 hours with backlight, 50 hours no backlight

Battery Life (Four Load Cells): 32 hours with backlight, 45 hours no backlight

Time and Date: Year/Month/Day

Operating Temperature: 14° F to 104° F / -10° C to 40° C

Dimensions (L x W): 9.5" x 4.9" x 2.5"
241 mm x 125 mm x 64 mm

Shipping Dimensions (L x W x H): 11" x 10" x 4"
280 mm x 250 mm x 100 mm

Certifications: CE, NTEP COC #15-084 (indicator), Measurement Canada AM-5998, RoHS 3, UKCA, ETL power adapter, WEEE

LIGHT INDUSTRIAL WAREHOUSE SHIPPING

SBI 521

Features

IP65 Measurement Canada Approval

- **Accuracy–** NTEP 10,000 divisions, Class III
- **Resolution–** 100 -100,000d primary units; 100 - 125,000d secondary units
- **Construction–** Heavy duty stainless steel IP65 with stainless steel swivel stand
- **Power–** 6V 4 AH rechargeable internal lead acid battery with 110/220 AC internal transformer (included) or external customer supplied 12 VDC
- **Display–** Seven digit, seven segment, 0.7″ / 17 mm LED Six digit, seven segment, 1″ / 25 mm LCD
- **Operator Keys–** Hold/Setup, Print/Func, N-G/Total, Unit/Data, Tare/Preset, Zero/On-Off

LCD

LED

Specifications

Unit: lb, lb/oz, kg, PCS, %

Serial Point: Two full duplex RS-232 serial port: demand or continuous

Max Display Range: -999,999 to 999,999

Function: Hold, counting, totalizing, check weighing, percentage, peak

Digital Calibration: Full front panel configuration

Multi-Point Calibration: Up to four points

Peak Capture Rate: 80Hz

Real Clock: Built-in nonvolatile real time and date

Analog Circuit: 24-bit A/D converter
Division Number Range: 100-100,000

Load Cell Excitation:
Voltage: 5 VDC, Max. Current: 120mA, can power 8 @ 350 Ohm load cells
Max Sensitivity: -3 mV/V to +3 mV/V

Communication:
Serial Port1: Full-duplex RS-232
Serial Port2: Full-duplex RS-232 or half-duplex RS-485
Baud Rate: Selectable: 1200-2400-4800-9600-19200-38400-57600 bps
Data Output Format: 8N1, 7O1, 7E1
Protocol: Programmable
Print Format: Selectable Gross Weight, Tare, Net, Time/Date, Scale ID, Percent, Count, Piece Weight, Total

Approximate Battery Life: LCD: 48 hrs*; LED: 30 hrs*
**Battery life will vary depending on number and type of load cells used, duration of backlight, temperature, and other factors*

Operating Temperature: 14° F to 104° F / -10° C to 40° C

Indicator Dimension (L x W x H):
3.5″ x 10.5″ x 8.5″ / 89 mm x 267 mm x 216 mm

Packaging Dimension (L x W x H):
11″ x 11″ x 6.5″ / 279 mm x 279 mm x 165 mm

Certifications: NTEP CC# 11-119, Measurement Canada AM-5923, FCC, Prop65, UL listed adapter, RoHS, CE, UKCA, WEEE

Part Number	Description	Ship Weight
AWT05-506154	SBI 521 LCD	10 lb
AWT05-506155	SBI 521 LED	10 lb

Accessories / Options

Part Number	Description	Ship Weight
AWT05-100825	Indicator interface cable (15′ / 4.5 m)	5 lb

ElectroSamson

Features

- **Accuracy–** Within ±0.1% of full load
- **Capacity–**
  22 lb x 0.02 lb/¼ oz / 10 kg x 0.01 kg
  55 lb x 0.05 lb/½ oz / 25 kg x 0.02 kg
  99 lb x 0.1 lb/1 oz / 45 kg x 0.05 kg
- **Construction–** Tough ABS case
- **Power–** 9V alkaline battery (included)
- **Display–** Angled 0.6″ / 15 mm seven segment LCD
- **Operator Keys–** On/Zero, Off, Hold, Unit

Specifications

Unit: lb, lb/oz, kg

Battery Life: Over eight hours continuous

Functions: 100% tare, hold, selectable units from lb, lb/oz or kg, auto-off after two minutes to help prolong battery life when not in use

Annunciators: Tare, hold

Operating Temperature: 0° C to +40° C / 32° to 104° F

Scale Dimension (Hook to Hook) (L x W x H):
13" x 3.75" x 2.25" / 330 mm x 95 mm x 76 mm

Product Weight: 0.85 lb / 0.38 kg

Packaging Dimension (L x W x H):
11″ x 5.5″ x 3″ / 279 mm x 140 mm x 76 mm

Packaging Contents: Fixed s hook, robust double hand metal lift bar and padded carrying pouch with belt clip

Part Number	Capacity	Ship Weight
816965007479	22 lb x 0.02 lb/¼ oz / 10 kg x 0.01 kg	1.5 lb
816965007486	55 lb x 0.05 lb/½ oz / 25 kg x 0.02 kg	1.5 lb
816965007493	99 lb x 0.1 lb/2 oz / 45 kg x 0.05 kg	1.5 lb

Accessories / Options

Part Number	Capacity	Ship Weight
G0006	Sling, washable. Max 11 lb.	0.6 lb

Sling

Padded carrying pouch with belt clip included

MS-15

Features

- **Accuracy–** Within 0.2% of full load
- **Capacity–** 44 lb x 0.01 lb / 20 kg x 5 g
- **Construction–** ABS plastic with removable weighing tray
- **Power–** Four AA batteries (included)
- **Display–** 1″ / 25 mm LCD with four active digits
- **Operator Keys:** On/Tare, Mode, Memory

Specifications

Unit: lb, kg

Weighing Range: 0.5 lb to 44 lb / 0.2 kg to 20 kg

Operating Temperature: 41° F to 95° F / 5° C to 35° C

Scale Dimension (L x W):
23″ x 13″ / 578 mm x 334 mm

Inside Tray Dimension (L x W):
23″ x 11″ / 584 mm x 292 mm

Product Weight: 6.6 lb / 3 kg

Packaging Dimension (L x W x H):
25″ x 15″ x 6″ / 635 mm x 381 mm x 152 mm

Packaging Contents: Scale and manual

Certifications: FC, Prop 65, CE

Part Number	Capacity	Ship Weight
816965005123	44 lb x 0.01 lb / 20 kg x 5 g	9 lb

MS-20 Series

Features

- **Accuracy–** Within 0.1% of full load
- **Capacity–** 44 lb x 0.5 oz / 20 kg x 10 g
- **Construction–** Stainless steel or plastic weighing tray. Plastic housed indicator with 16"-26" coiled cable.
- **Power–** 9V 100mA AC adapter or 9V alkaline battery (not included)
- **Display–** 1″ / 25 mm LCD with four active digits
- **Operator Keys:** On/Off/Tare, Unit, Hold

Specifications

Unit: lb, lb/oz, kg

Tray: Stainless steel or plastic

Operating Temperature: 5° C to 35° C / 41° F to 95° F

Tray Dimension (L x W x H):
21″ x 10″ x 2″ / 533 mm x 254 mm x 51 mm

Inside Tray Dimension (L x W x H):
MS20: 20½″ x 10″ x 2⅜″ / 521 mm x 254 mm x 60 mm

MS20S: 20½″ x 11½″ x 2¼″ / 521 mm x 292 mm x 57 mm

Packaging Dimension (L x W x H):
5 5/8" x 12 3/10" x 10 4/5"
143 mm x 313 mm x 275 mm

Product Weight: 8.2 lb / 3.7 kg

Certifications: Full FCC compliance; UL/CUL power adapter

Part Number	Model	Capacity	Ship Weight
816965000852	MS-20	44 lb x 0.5 oz / 20 kg x 10 g	9.1 lb
816965001002	MS-20S	44 lb x 0.5 oz / 20 kg x 10 g	10.75 lb

HEALTH CARE
HEALTH CLUBS
SCHOOLS

HS-200M

Features

- **Capacity–** 440 lb x 4 oz / 200 kg x 100 g
- **Construction–** Steel with durable white finish
- **Height Gauge to 7′ / 210 cm**
- **Rollers Included for Easy Transport**
- **Easy-to-Read Dual Beam**
- **Dual Marked in Pounds / Kilograms**
- **Accurate Full Range Weights**

Specifications

Scale Dimension (L x W x H):
22″ x 10.8″ x 58.5″ / 559 mm x 275 mm x 1485 mm

Platform Dimension (L x W):
14.75″ x 10.8″ / 375 mm x 275 mm

Height Rod Range:
2′ to 7′ x 0.125″ / 60 cm to 210 cm x 0.1 cm

Product Weight: 38 lb / 17 kg

Packaging Dimension (L x W x H):
59″ x 20″ x 6″ / 1499 mm x 508 mm x 152 mm

Packaging Contents: Manual, platform, height scale, weighing tower, wheels and miscellaneous hardware

Part Number	Capacity	Ship Weight
816965004850	440 lb x 4 oz / 200 kg x 100 g	40 lb

HS-300

Features

- **Accuracy–** Within 0.1% of full load
- **Capacity–** 660 lb x 0.2 lb / 300 kg x 0.1 g
- **Construction–** Mild steel with durable powder coated white finish
- **Power–** Four AAA batteries or 9 VDC, 600mA US power adapter (both included)
- **Display–** 0.625″ / 17 mm high backlit LCD
- **Operator Keys–** Hold/Print, Unit, Tare, On/Off/Zero

Specifications

Unit: lb, lb/oz, kg

Serial Port: One full duplex RS-232 with cable

Battery Life: Approximately 20 hours continuous

RS-232: Supplied complete with 10′ / 3 mm cable (nine pin to nine pin type connector, bi-directional full duplex)

Rollers Included for Easy Transport

Operating Temperature: 41° F to 95° F / 5° C to 35° C

Platform Dimension (L x W):
20.5″ x 20.5″ / 521 mm x 521 mm

Height Rod Dimension:
2′ to 7′ x 0.125″ / 60 cm to 210 cm x 0.1 cm

Handrail Height (W x H):
16″ x 49″ / 406 mm x 1245 mm

Indicator Dimension (L x W x H):
6.5″ x 1.2″ x 3.2″ / 165 mm x 30 mm x 81 mm

Packaging Dimension (L x W x H):
54.5″ x 30.5″ x 9″ / 1384 mm x 775 mm x 230 mm

Packaging Contents: Platform, indicator, handrail, manual, height gauge, RS-232 cable, power supply and miscellaneous hardware

Certifications: Full FCC compliance, ETL power adapter, Prop 65, CE, UKCA, WEEE, RoHS

Part Number	Capacity	Ship Weight
816965004812	660 lb x 0.2 lb / 300 kg x 0.1 kg	54 lb

HEALTH CARE HEALTH CLUBS

MS140-300 with SBI 140 LCD Indicator

Features

- **Accuracy–** +/- 3 divisions
- **Capacity–** 660 lb x 0.2 lb / 660 lb x 5 oz / 300 kg x 0.1 kg
- **Construction–** Stainless steel weighing surface with mild steel foam covered handrails. Rigid base design.
- **Power–** Four AAA batteries or 9 VDC, 600mA wall mount adapter (both included)
- **Display–** Five digit 0.65″ / 17 mm digits with seven segment LCD
- **Operator Keys–** On/Off/Zero, Tare, Unit, Hold/Print

Specifications

Unit: lb, lb/oz, kg

Serial Port: One full duplex RS-232 with cable

RS-232: Supplied complete with 10′ cable (nine pin to nine pin type connector, bi-directional full duplex)

Integrated Wheel Kit: For easy portability

Weight Hold: May be used to freeze and store the displayed weight so that you may attend to the patient's needs

Operating Temperature: 41° F to 95° F / 5° C to 35° C

Scale Dimension (L x W x H):
20.5″ x 20.5″ x 44.25″ / 520 mm x 520 mm x 1135 mm

Part Number	Capacity	Ship Weight
816965004829	660 lb x 0.2 lb / 300 kg x 0.1 kg	55 lb

Platform Dimension (L x W x H):
20.5″ x 20.5″ x 2.5″ / 520 mm x 520 mm x 65 mm

Indicator Dimension (L x W x H):
6.5″ x 1.2 x 3.2″ / 165 mm x 30 mm x 81 mm

Packaging Dimension (L x W x H):
46″ x 25″ x 6″ / 1168 mm x 635 mm x 152 mm

Packaging Contents: Manual, platform, three piece handles, power supply, RS-232 cable, indicator, three hex wrenches and pull through string

Certifications: FCC compliance, ETL power adapter

CS-200M

Features

- **Capacity–** 440 lb x 4 oz / 200 kg x 100 g
- **Construction–** Powder coated steel with die-cast beam

Specifications

Unit: lb, kg

Locking Rear Wheels for Safety

Swivel Front Wheels for Easy Transport

Lift Away Armrests for Easy Access

Accurate Full Range Weights

Scale Dimension (L x W x H):
25″ x 35″ x 40″ / 635 mm x 889 mm x 1016 mm

Seat Dimension (L x W x H):
14″ x 16″ x 13″ / 350 mm x 405 mm x 340 mm

Product Weight: 70 lb / 32 kg

Packaging Dimension (L x W x H):
30″ x 24″ x 25″ / 762 mm x 609 mm x 635 mm

Packaging Contents: Manual, footrest, two armrests, scale with wheel assembly, seat, back handle, weighing tower and miscellaneous hardware

Part Number	Capacity	Ship Weight
816965004843	440 lb x 4 oz / 200 kg x 0.1 kg	80 lb

MS1000-LCD with SBI 210 LCD Indicato

Features

- **Accuracy–** Within 0.1%
- **Capacity–** 1000 lb x 0.5 lb / 500 kg x 02 kg
- **Construction–** Powder coated rugged smooth steel deck structure and built-in ramps, fitted with two handles and wheels for relocating the scale. Robust ABS plastic indicator with bench or pole brackets for mounting.
- **Power–** 9V 600mA power supply with US power adapter (included) or six AA batteries (not included)
- **Display–** Six large, easy-to-read 1.5″ / 38 mm high digits, large seven segment LCD with white backlight
- **Operator Keys–** On/Off/Zero, Tare, Unit, Print, Hold, BMI

Indicator Specifications

Unit: lb, kg

Scale Functionality: This scale is designed to be easy and simple to use

Tare: 100% subtractive

BMI: Calculates the Body Mass Index (BMI)

Hold: Used to freeze a displayed weight value once the patient steps off the scale

Communication: One USB (VCP) and one RS-232 bi-directional full duplex port. Optional COM cables

Print Format: Configurable

Indicator Mounting: Desk or pole mountable, either vertically or horizontally

Operating Temperature: 14º F to 104º F / -10º C to 40º C

Indicator Dimension (L x W x H): 9.5″ x 4.9″ x 2.5″ / 241 mm x 125 mm x 64 mm

Packaging Dimension (L x W x H): 5″ x 9″ x 4.5″ / 385 mm x 230 mm x 122 mm

Certifications: FCC compliant, Prop 65, ETL power adapter, UKCA, CE, RoHS 3, WEEE

Part Number	Capacity	Ship Weight
810036380263	1000 lb x 0.5 lb / 500 kg x 0.2 kg	110 lb

Accessories / Options

Part Number	Description	Ship Weight
810036380355	Indicator floor stand	11 lb

Floor Specifications

Load Cell: 4-planner beam load cells connect to the ABS junction box with 10 ft / 3 m interface cable

Product Dimension:

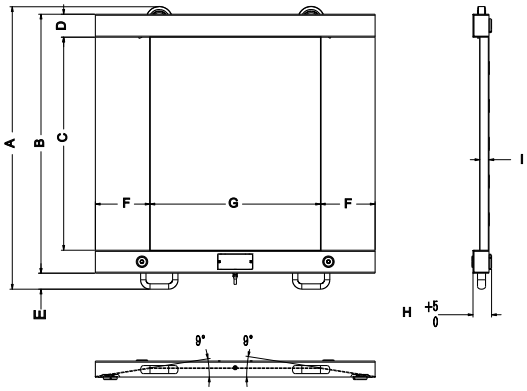

	in.	mm
A	45.7	1060
B	38.3	972
C	31.4	800
D	4.4	86
E	2.4	60
F	8.1	205
G	25.1	640
H	2.75	70
I	1.4	35

Portable: Fitted with two handles and wheels to easily relocate

Ramp: Designed with built-in 9 degree gradual angle to make entry and exit safe and easy

Guard Rail Dimension (L x W): 33.85″ x 27.6″ / 860 mm x 700 mm

Product Weight: 100 lb / 45 kg

Packaging Dimension (L x W x H): 48″ x 47.2″ x 8.1" / 1220 mm x 1200 mm x 205

Packaging Contents: MS1000-LCD platform, guard/handrail, indicator, power supply with US plug and indicator mounting brackets

Animal Weighing **Shipping**
Industrial **Warehouse**

PS1000 / PS2000

Features

- **Accuracy–** Within 0.1%
- **Capacity–**
  1000 lb x 0.5 lb / 500 kg x 0.2 kg
  2000 lb x 1 lb / 1000 kg x 0.5 kg
- **Construction–** Rugged steel with tread plate surface and stainless steel/ABS indicator
- **Power–** 9 VDC, 600mA adapter (included) or four AAA batteries (not included)
- **Display–** Five digit 0.625″ / 17 mm digits with seven segment LCD
- **Operator Keys–** On/Off/Zero, Tare, Unit, Hold/Print

PS1000
Shown with optional indicator stand

Indicator Specifications

Unit: lb, lb/oz, kg

Animal Weighing Software

Functions: Weight hold, stable weight indicators with auto power off

Overload Capacity: Capable of withstanding 150% capacity of weight without damaging scale

RS-232: Supplied complete with 10′ / 3 m cable (nine pin to nine pin type connector, bi-directional full duplex)

Calibration: Front panel accessible

Battery Life: Approximately 20 hours continuous

Operating Temperature: 41° F to 95° F / 5° C to 35° C

Indicator Dimension (L x W x H):
6.5″ x 1.2″ x 3.2″ / 165 mm x 30 mm x 81 mm

Packaging Dimension (L x W x H):
9.25″ x 7.25″ x 3″ / 235 mm x 184 mm x 76 mm

Certifications: RoHS, WEEE, Prop65 and FCC compliant, ETL, UKCA/CE

Floor Specifications

Adjustable Foot Pads: To work on uneven surfaces

Two Handles: Easily relocate

Ramped Ends

Platform Dimension (L x W x H):
PS1000: 55.75″ x 20.25″ x 2.5″
1416 mm x 514 mm x 64 mm

PS2000: 59″ x 30″ x 2.5″
1498 mm x 762 mm x 64 mm

Packaging Dimension (L x W x H):
PS1000: 57.5″ x 22″ x 4″
1461 mm x 559 mm x 102 mm

PS2000: 64″ x 36″ x 7″
1626 mm x 914 mm x 178 mm

Options (not included) (L x W x H):
Floor Stand:
13.8″ x 13.8″ x 1″ / 350 mm x 350 mm x 25 mm
Overall Height: 37″ / 940 mm
Weight: 10 lb / 4.5 kg

Part Number	Capacity	Ship Weight
816965001460	1000 lb x 0.5 lb / 500 kg x 0.2 kg	77 lb
816965003907	2000 lb x 1.0 lb / 1000 kg x 0.5 kg	124 lb

Accessories / Options

Part Number	Description	Ship Weight
810036380355	Indicator floor stand	11 lb
816965007073	PS1000 mat kit	13 lb
816965007080	PS2000 mat kit	16 lb

PS2000
Shown with optional indicator stand

PS3000-LCD with SBI 210 Indicator

Features

- **Accuracy–** Within 0.1%
- **Capacity–** 3000 lb x 1 lb / 1500 kg x 0.5 kg
- **Construction–** Mild steel construction with safety tread plate surface and rubber mat. Robust ABS indicator housing.
- **Connection–** 250 mm / 9.8" cable fixed to indicator with connector, 3 m / 9.8' interface cable with connector
- **Power–** 9V 600mA universal power supply with USA/UK/EU adapters (incuded) or six AA batteries (not included)
- **Display–** Six large, easy-to-read 1.5" / 38 mm high digits, large seven segment LCD with white backlight
- **Operator Keys–** On/Off/Zero, Tare, Unit, Print, Hold, Accumulate/Total

Indicator Specifications

Unit: lb, kg, pcs, %

Tare: 100% subtractive

Check Weighing: Used when packing or filling to a set weight

Counting: Used for stock control or items within a box

Accumulation: Used to get the final consignment weight total

Hold: Captures and holds a stable weight on screen

Percentage: Used to carry out weightments on % basis

Communication: One USB (VCP) and one RS-232 bi-directional full duplex port. Optional COM cables

Print Format: Configurable

Indicator Mounting: Desk or pole mountable, either vertically or horizontally

Operating Temperature: 41º F to 95º F / 5º C to 35º C

Indicator Dimension (L x W x H):
9.5" x 4.9" x 2.5" / 241 mm x 125 mm x 64 mm

Packaging Dimension (L x W x H):
5" x 9" x 4.5" / 385 mm x 230 mm x 122 mm

Certifications: FCC compliant, Prop 65, ETL power adapter, UKCA, CE, RoHS 3, WEEE

Floor Specifications

Load Cell: Four waterproof-IP67, 350 Ohm shear beam load cells with height adjustable feet

J-Box: Weatherproof IP65 ABS housing, fitted with a 10' / 3 m interface cable as standard

Anti-Slip Rubber Mat: Easy on animal hooves, reduce noise and risk of slipping (included)

150% Overload Protection

Platform Dimension (L x W x H):
78.75" x 39.37" x 3.93" / 2000 mm x 1000 mm x 100 mm

Platform Weight: 264 lb / 120 kg

Packaging Dimension (L x W x H):
81" x 42" x 7.1" / 2050 mm x 1050 mm x 180 mm

Packaging Contents: PS3000-LCD platform, indicator, power supply with USA/US/EU plug ends and indicator mounting brackets

Options (not included) (L x W x H):
Floor Stand:
13.8" x 13.8" x 1" / 350 mm x 350 mm x 25 mm
Overall Height: 37" / 940 mm
Weight: 10 lb / 4.5 kg

Part Number	Capacity	Ship Weight (platform + indcator)
810036380331	3000 lb x 1 lb / 1500 kg x 0.5 kg	275 + 4.4 lb

Accessories / Options

Part Number	Description	Ship Weight
810036380355	Indicator floor stand	11 lb

Note: See SBI 210 page for more accessories.

6030

Features

IP67

- **Accuracy–** Within 0.06% of full load
- **Capacity–** 10 lb x 0.002 lb /10 lb x 0.05 oz / 160 oz x 0.05 oz / 5000 g x 1 g
- **Construction–** Food grade stainless steel upper cover and removable stainless steel platter for easy cleaning
- **Power–** 9 volt alkaline battery (included), AC adapter (not included)
- **Display–** 0.8" / 20 mm LCD with five digits
- **Operator Keys–** On/Off, Tare, Unit

Specifications

Unit: lb, oz, lb/oz, kg, g

Operating Temperature: 41° F - 95° F / 5° C - 35° C

Scale Dimension (L x W x H):
6.6″ x 5.9″ x 0.1″ / 170 mm x 160 mm x 40 mm

Platter Dimension (L x W):
5.9″ x 4.7″ / 150 mm x 120 mm

Product Weight: 1.5 lb / 0.6 kg

Packaging Dimension (L x W x H):
10″ x 7.75″ x 3″ / 254 mm x 196 mm x 76 mm

Certifications: UKCA, CE, RoHS 3, WEEE, FCC, Prop 65

Part Number	Capacity	Ship Weight
816965006557	10 lb x 0.002 lb / 5000 g x 1 g	2 lb

Model C3235

Features

IP66 NSF

- **Accuracy–** Within 0.05% at full load
- **Capacity–**
  6 lb x 0.001 lb / 3 kg x 0.0005 kg
  12 lb x 0.002 lb / 6 kg x 0.001 kg
  30 lb x 0.005 lb / 15 kg x 0.002 kg
- **Construction–** Washable and corrosion free ABS/stainless steel housing with food safe stainless steel weight platter
- **Power–** Internal main/AC adapter and rechargeable battery (approx. 20 hours)
- **Display–** Six digit, 0.5″ / 13 mm high seven segment bright red LED with accept, over, under
- **Operator Keys–** Off, Zero, Function, Tare

Specifications

Unit: lb, lb/oz, kg, g

Keyboard: Function key gives access to check weigh targets (with audible alarm), unit switching and count

Annunciators: lb, oz, kg, g, tare, over, under, accept, count, zero, and battery voltage

Functions: Count, unit switching, check weigh limits with alarm, auto off after 10 minutes of inactivity

Battery Life: Approximately 20 hours (charge time is 12 hours)

Operating Temperature: 23° F to 95° F / -5° C to 35° C

Scale Dimension (L x W x H):
9.25″ x 11″ x 4″ / 235 mm x 285 mm x 110 mm

Platter Dimension (L x W x H):
7.5″ x 9″ x 0.5″ / 190 mm x 229 mm x 13 mm

Product Weight: 8 lb / 3.7 kg

Packaging Dimension (L x W x H):
13.25″ x 11″ x 5.75″ / 337 mm x 280 mm x 146 mm

Certifications: NSF, full FCC compliance, Prop 65, CEC, UL approved power adapter

Part Number	Capacity	Ship Weight
816965002535	6 lb x 0.001 lb / 3 kg x 0.5 g	10 lb
816965002542	12 lb x 0.002 lb / 6 kg x 1 g	10 lb
816965002559	30 lb x 0.005 lb / 15 kg x 2 g	10 lb

Model C3236

Features

IP68

- **Accuracy–** 0.04% at full load
- **Capacity–**
  6 lb x 0.005 lb / 3 kg x 0.0002 kg
  15 lb x 0.001 lb / 7 kg x 0.0005 kg
  30 lb x 0.002 lb / 15 kg x 0.001 kg
- **Construction–** Food grade 304 stainless steel housing and top pan and IP68 (NEMA4X) water ingress protection
- **Power–** Removable AC power adapter (included) along with a built-in rechargeable lead acid battery
- **Display–** Large 1.2" x 3.5" / 30 mm x 90 mm red LED display with five 0.6" / 15 mm high digits
- **Operator Keys–** On/Zero/Tare, Function, Unit, Off

Specifications

Unit: lb, kg, g, lb-oz (not legal-for-trade)

Main Functionality: General weighing and check weighing with audio low, ok and high buzzer

Battery Life: Up to 62 hours

Operating Temperature: 14° F to 104° F / -10° C to 40° C

Scale Dimension (L x W x H):
13" x 11.4" x 4.3" / 330 mm x 290 mm x 110 mm

Platter Dimension (L x W):
7.5" x 10" / 190 mm x 255 mm

Product Weight: 10.5 lb / 4.5 kg

Packaging Dimension:
14.4" x 13.2" x 5.7"/ 365 mm x 335 mm x 145 mm

Certifications: FCC, Prop 65, UL, UKCA, CE, RoHS 3, WEEE

Part Number	Capacity	Ship Weight
816965007165	6 lb x 0.0005 lb / 3 kg x 0.0002 kg	7.7 lb
816965007172	15 lb x 0.001 lb / 7 kg x 0.0005 kg	7.7 lb
816965007189	30 lb x 0.002 lb / 15 kg x 0.001 kg	7.7 lb

CANDY STORE
FARMERS MARKET
GROCERY STORES

PC3060

Features

EC Approval

- **Accuracy–** NTEP and EC approved Class III 3000 divisions, multi interval, 30/60 lb (15/30 kg) multi-interval
- **Capacity–** 30/60 lb x 0.01/0.02 lb 15/30 kg / 0.005/0.01 kg
- **Construction–** Compact and robust ABS plastic housing with food grade 304 stainless steel weight platter
- **Power–** 120V 500mA power adapter (included) and a 6V/3.2 Ah lead acid rechargeable battery
- **Display–** Six large 2.5" x 0.8" / 65 mm x 20 mm high LCD display with blue backlit ½" / 12 mm high digits for displaying weight, unit price and total price
- **Operator Keys–** Eight function keys and 12 numeric entry keys: Change, Memory Add, PLU, Save, Quantity, Zero, Units, Tare

Specifications

Unit: lb, kg

Key Features: Ten pre-stored PLU's, auto price clear and up to 100 entry accumulator

Battery Life: 40 hours

Tare: 100%

Operating Temperature: 14° F to 104° F / -10° C to 40° C

Scale Dimension (L x W x H):
12.3" x 10.3" x 4.3" / 313 mm x 263 mm x 109 mm

Platter Dimension (L x W):
8" x 10.3" / 204 mm x 263 mm

Product Weight: 7.2 lb / 3.3 kg

Packaging Dimension (L x W x H):
14.4" x 13.2" x 7.5" / 365 mm x 335 mm x 190 mm

Certifications: 3000d NTEP CC #18-119, 3000d EC #0200-NAWI-05154, CE, RoHS

Part Number	Capacity	Ship Weight
816965007257	30/60 lb x 0.01/0.02 lb / 15/30 kg x 0.005/0.01 kg	8 lb

Price Computing

67XXU Series

Features

Measurement Canada Approval

- **Accuracy–** ≤ 0.01%
- **Capacity–** 5 lb / 2.5 kg, 15 lb / 7.5 kg, 30 lb / 15 kg, 60 lb / 30 kg
- **Construction–** 6702U/6710U: Aluminum plate understructure and stainless steel platter

  6720U: Heavy duty cast aluminum X shape support and stainless steel platter
- **Power–** 9 VDC, 600mA power adapter with center positive (included) or USB (VCP) cable (not included)
- **Display–** ABS plastic housing. 5½ digits seven segments 0.58″ / 15 mm high LCD with blue backlight
- **Operator Keys–** Hold/Print, On/Off/Zero, Unit, Tare

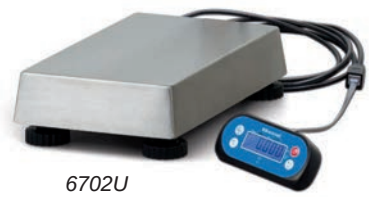

6702U

Specifications

Unit: lb, oz, lb/oz* (*non-NTEP), kg, g

NSF Approved: For use in food contact applications

Easy-to-Install: Bi-directional nine pin RS-232 and USB port. Interfaces to most electronic cash registers and point of sale software

Interface Protocols: NCI, ECR, 8213 (Sharp), EH (PS60)

Quick Disconnect: Makes all cable connections easy

"Touchless" Tare: Just wave or place your hand over the display to zero the scale. Electronic mechanism enhances food handling safety.

Check Weighing: OK annunciator with alarm

Count Weighing: Piece counting

Hold: Positive peak, negative peak, average hold and auto hold

Auto Zero Tracking: Zero light indicator and manual control when out of range

Configurable Photo Eye

Zero Range: Selectable up to full scale

Alternate Calibration Points: Allows use of less than full capacity weight for calibration

Auto-Compensation: Local gravity effects to avoid initial calibration with test weights

Adjustable Filter Settings: Reduce environmental vibration noise for rapid setting and quick measurements

Communication: USB (VCP) and nine pin RS-232

Remote Display Enclosure (L x W x H):
6702U/6710U:
2.4″ x 5.8″ x 1.1″ / 62 mm x 148 mm x 29 mm

Adjustable Height:
6702U/6710U: 2.75″ - 3.25″ / 69 mm x 82 mm
6720U: 3.5″ - 4″ / 88 mm 101 mm

Certifications: NTEP 13-074*, Measurement Canada AM-5912C, CE/UKCA, ETL power adapter, NSF/ANSI standard 169
**Counting function non-trade approved*

6710U

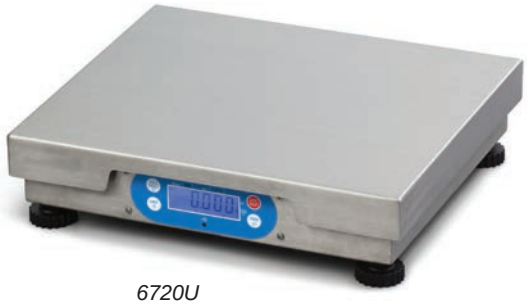

6720U

Model	Part Number	Platter Size	Capacity	Volt	Ship Weight
6702U	816965006137	6" x 10" 152 mm x 254 mm	5 lb x 0.001 lb / 2.5 kg x 0.0005 kg (external display)	110V	8 lb
6702U	816965005857		15 lb x 0.005 lb / 7.5 kg x 0.002 kg (external display)	110V	8 lb
6702U	816965006083		30 lb x 0.01 lb / 15 kg x 0.005 kg (external display)	110V	8 lb
6710U	816965005864	10" x 10" 254 mm x 254 mm	15 lb x 0.005 lb / 7.5 kg x 0.002 kg (external display)	110V	12 lb
6710U	816965005871		30 lb x 0.01 lb / 15 kg x 0.005 kg (external display)	110V	12 lb
6720U	816965005888	12" x 14" 305 mm x 355 mm	15 lb x 0.005 lb / 7.5 kg x 0.002 kg (internal display)	110V	13.7 lb
6720U	816965005895		30 lb x 0.01 lb / 15 kg x 0.005 kg (internal display)	110V	13.7 lb
6720U	816965005901		30 lb x 0.01 lb / 15 kg x 0.005 kg (external display)	110V	13.7 lb
6720U	816965006144		60 lb x 0.02 lb / 30 kg x 0.01 kg (internal display)	110V	13.7 lb

Accessories / Options

Part Number	Description	Ship Weight
816965005918	6702U, 12″ / 305 mm display post	1 lb
816965005925	6710U, display bracket attaches display to scale base	0.27 lb
1140-13842	10′ / 3 m RS-232C interface cable (9-pin M/F pass through) (67XXU)	0.4 lb
AWT05-507974	6′ / 1.8 m USB A to A cable (67XXU)	0.1 lb
816965005949	Remote display with cable 24″ / 610 mm (67XXU)	0.5 lb
816965005932	Remote display with extension cable 7′ / 2 m(67XXU)	0.4 lb
816965005963	Remote display kit with 12″ / 305 mm post and 7′ / 2 m cable (67XXU)	1.6 lb
816965005956	7′ / 2 m display extension cable (67XXU)	0.4 lb

Model	Scale Dimension (L x W x H)	Remote Display Dimension (L x W x H)
6702U	11.8" x 6.4" x 3.1" 300 mm x 164 mm x 80 mm	2.4″ x 5.8″ x 1.1″ 61.8 mm x 148.1 mm x 29 mm
6710U	12.9″ x 10.4″x 3.1″ 330 mm x 266 mm x 80 mm	2.4″ x 5.8″ x 1.1″ 61.8 mm x 148.1 mm x 29 mm
6720U	13.9" x 12.0" x 3.4" 355 mm x 305 mm x 88 mm	Optional

Model	Packaging Dimension (L x W x H)
6702U	14.5″ x 15.5″ x 5.5″ 368 mm x 393 mm x 139 mm
6710U	15.5″ x 18.5″ x 5.5″ 393 mm x 469 mm x 139 mm
6720U	18.3″ x 19.8″ x 5.7″ 465 mm x 505 mm x 145 mm

CP103

Features

- **Windows® Driver**
- **POS Compatible**
- **Construction–** ABS plastic
- **Power–12 volt DC or** AC adapter or DC power cable (not included)
- **Configurable Baud–** 1200 -115,200
- **Data Bits–** Fixed at eight
- **Double High, Double Wide Capable**
- **RS-232**
- **Time and Date Standard**
- **Customize Logo Affixation**
- **Invert Printing**

Specifications

Serial RS-232

Factory Default: 9600, 8, N, 1*
*Configuration cable AWT05-508092 needed to change configuration

Paper Width: 2.3" / 58.4 mm

Print Speed: 90 mm / s max

Paper Out Sensor

Data Buffer: 10K

Resolution: 8 dot/mm (203 dpi)

Number of Columns: 24 or 32
*Configuration cable "AWT05-508092 (included)

Operating Current: >2 AMP

Operating Temperature: 41° F to 104° F / 0° C to 50° C

Printer Dimension (L x W x H):
4" x 3" x 1.8" / 104 mm x 75 mm x 48 mm

Product Weight: 0.32 lb / 0.15 kg

Part Number	Description	Ship Weight
816965005727	3″ / 75 mm wide, thermal printer	1 lb

Accessories / Options

Part Number	Description	Ship Weight
AWT05-100573	12 VDC US adapter	1 lb
AWT05-508093	RS-232 communication cable with tinned leads	0.5 lb
AWT25-501226	Direct DC power cable	0.1 lb
AWT05-508092	RS-232 configuration cable to DB9	0.5 lb
AWT25-501825	CP103 to York Chiller cable	0.5 lb
AWT25-501826	CP103 to 15-pin D sub (Agricultural indicators)	0.5 lb
AWT05-508096	CP103 to Digi Star Kit (see price sheet for kit details)	3 lb
AWT05-508097	CP103 to eight pin AMP connector (Agricultural indicator) kit (see price sheet for kit details)	3 lb
816965006465	1200 baud (9600 selectable) CP103 with mod for always ON (see price sheet for kit details)	3 lb
AWT05-507979	Paper rolls, 10 rolls per box	4 lb

The Load Cell Guide will remain the same for 2023.

Brecknell's comprehensive range of load cells, transducers, weigh pads and hardware can be found in our Load Cell catalog.

Brecknell

Brecknell USA

1000 Armstrong Drive
Fairmont, Minnesota 56031

Toll-Free: 800-637-0529
Telephone: 507-238-8702
Fax: 507-238-8271

Email: sales@brecknellscales.com
www.brecknellscales.com

Brecknell Canada

6429 Abrams Street
St Laurent, Quebec
Canada H4S 1X9

Toll-Free: 800-561-9461
Telephone: 514-695-0380
Fax: 514-695-0385

Email: sales@brecknellscales.ca
www.brecknellscales.ca

ISO 9001

Brecknell is part of Avery Weigh-Tronix. Avery Weigh-Tronix is a trademark of the Illinois Tool Works group of companies whose ultimate parent company is Illinois Tool Works Inc ("Illinois Tool Works"). Copyright © 2023 Illinois Tool Works. All rights reserved. This publication is issued to provide outline information only and may not be regarded as a representation relating to the products or services concerned. This publication was correct at the time of going to print, however Avery Weigh-Tronix reserves the right to alter without notice the specification, design, price or conditions of supply of any product or service at any time.

ProductGuide_USA_L_501053.indd
V5 AWT35-501053